Northrop Grumman Thermalyzer

Connor Anderson | Connor Chin | Kyle Ellis | Nick Sweeting | Matt Turner

UCSB Mechanical Engineering in association with Northrop Grumman

Background

The main goal behind this project is determining a professional method to evaluate the properties of various heat spreader materials. In particular, this method should determine the thermal resistance and conductivity of the tested material. It should provide repeatable, accurate results for a variety of sizes of heat spreaders. Overall, the Thermalyzer would hopefully lead to more efficient heat spreaders, which would result in electronics that could perform at a much higher standard.

Overview

The Thermalyzer setup is composed of a base, slider system, flux block, cold plate, heat spreader, pressure system, cartridge heater, DC power supply, recirculation bath, and thermocouples. The important measured values are the heat flux going through the system and the temperature difference across the heat spreader. These values can be used to measure the thermal resistance and conductivity.

Design Specifications

Table 1: Design Specifications

Parameters	Desired Values	Progress
Temperature Range	0-200°C	Pass
Flux Range	0-50 W/in^2	Pass
Max Geometry	3.5" x 12" x 0.05"	Pass
Chamber Dimensions	20" x 20" x 30"	Pass
Accuracy	10-20% Overall System Uncertainty	30%
Repeatability	Measurements within 5-10% of each other	5%

Thermalyzer

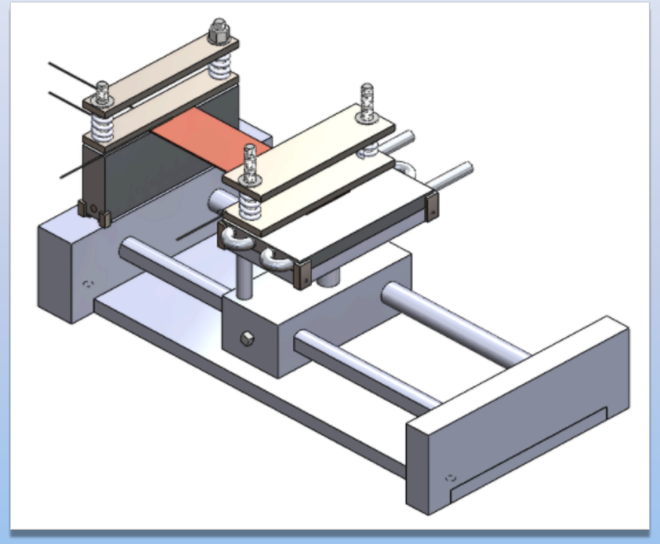

Figure 1: Thermalyzer Assembly

Hardware / Key Components

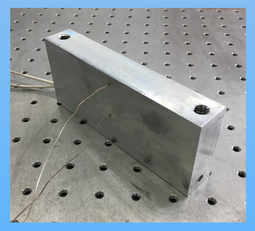

Figure 2: Flux Block

The flux block measures the heat flux going through the system using Fourier's Law. It is composed of aluminum with a known thermal conductivity as well as two thermocouples and a cartridge heater.

Figure 3: Cold Plate

The cold plate acts as a heat sink in the system. It allows heat to transfer at a faster rate due to the greater temperature difference.

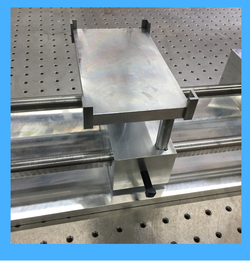

Figure 4: Slider System

The slider system is used to accommodate multiple sizes of heat transfer devices. It can hold a minimum size of 1" x 5" x 0.05" and a maximum size of 3.5" x 12" x 0.05".

Repeatability Test

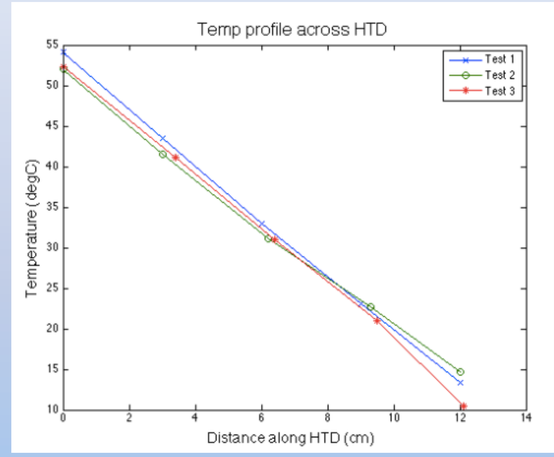

Figure 5: Heat Spreader Temperature Profile

Team members individually performed the same test using a standard operating procedure to determine system repeatability. From this, it was determined the Thermalyzer had an **overall repeatability of 4.5%**.

Flux Block Validation

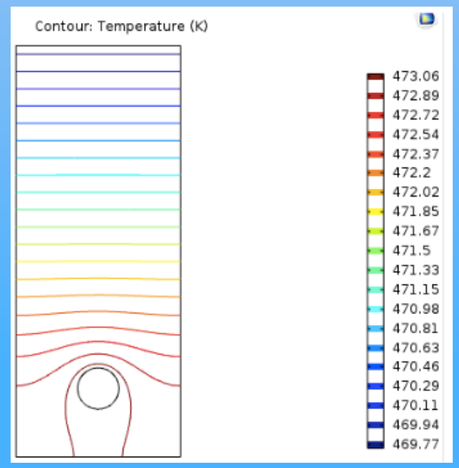

Figure 6: COMSOL Model of Flux Block

- Straight lines signify constant temperature along the width of flux block as heat transfers up.
- Validates even heating across flux block.
- Allows thermocouples to be placed anywhere along width of flux block.

NORTHROP GRUMMAN

Acknowledgements:

Special thanks to Roger Green, Clint Buckman, Russell Rioux, Martin Hagenbuechle, Ted Bennett, Tyler Susko and Stephen Laguette.

UC SANTA BARBARA engineering