RPL STATIC FIRE TEST RIG

Hayden Alcaraz | Mitchell Aslo | Jack Button | Meital Carmi | Garrett Clover | Jack Dibachi
Brandon Dutcher | Mingzhe Li | Nolan McCarthy | Chuhang Meng | Dakota Rogers

Background

RPL is designing a rocket fueled by liquid oxygen and methane, a combination of propellants that can be developed on Mars. Before the rocket can be launched, the engine and injector need to be tested. We set out to design a static fire test rig capable of measuring the performance of the engine and propulsion system.

Overview

The propulsion system will use valves, vents, and regulators to provide helium flow to safely pressurize the propellant tanks and achieve the optimal mixture ratio in the engine. The electronics system will provide controls for the engine, as well as a means to gather, transmit and process data from the rig during the static fire test.

System Block Diagrams

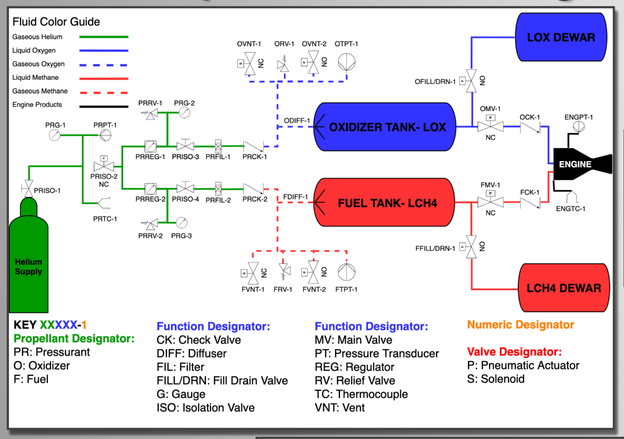

Piping & Instrumentation Diagram (P&ID)

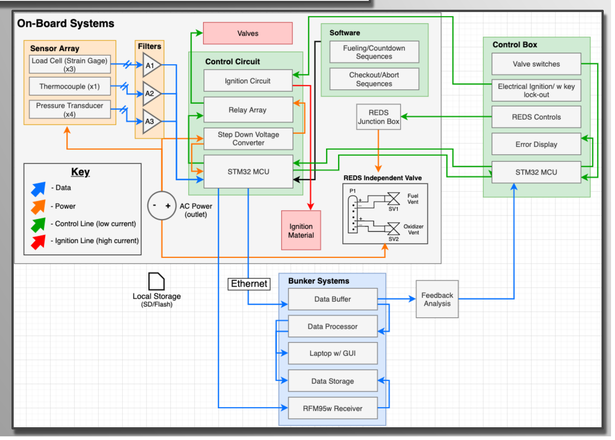

Electronics Functional Block Diagram

Static Fire Rig

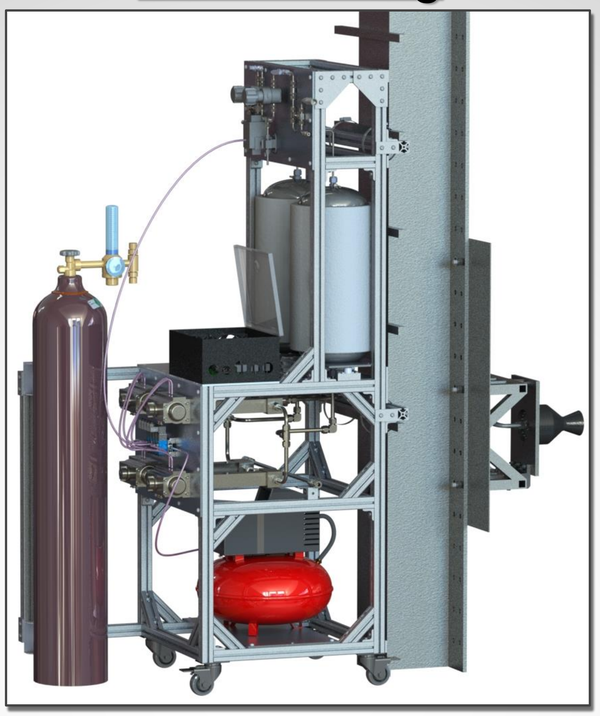

Model of static fire rig mounted to the I-beam at the test site

Key Components

Structure

Secures all components and attaches them to the I-beam. The aluminum 8020 frame, above, will mount the feed system and tanks.

Electronics Box

Aluminum box for electrical insulation with hinge door for easy access and fans for thermal management. Houses all the onboard electronics components, such as the STM, AC/DC converter, and the various other circuits.

Injector Flow Test

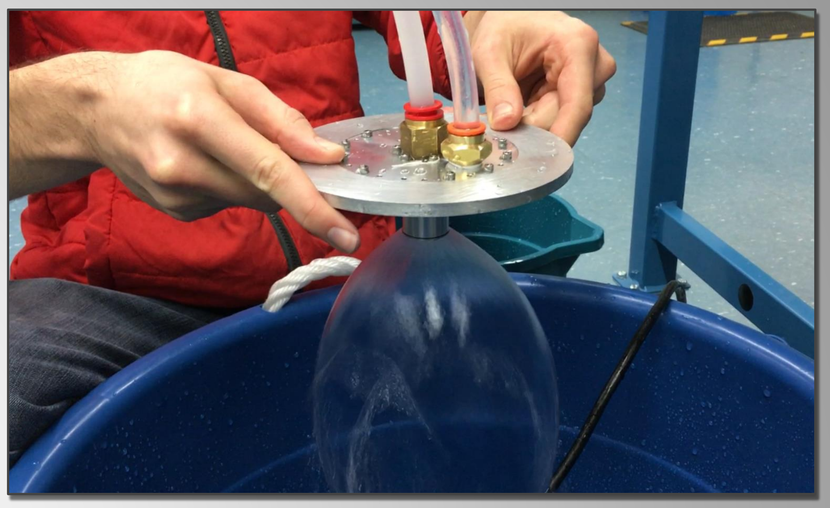

Water flow test of the injector, which will mix the propellants before they enter the engine, to confirm that the injector will provide the correct mixture ratio to the engine.

Sensor Integration with GUI

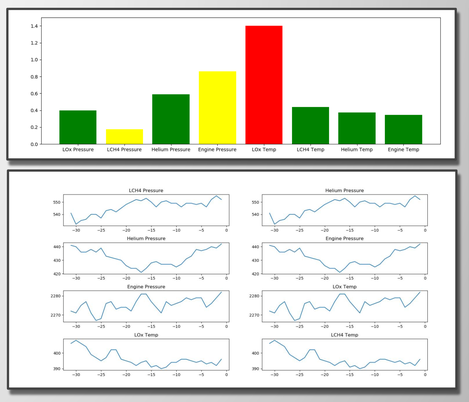

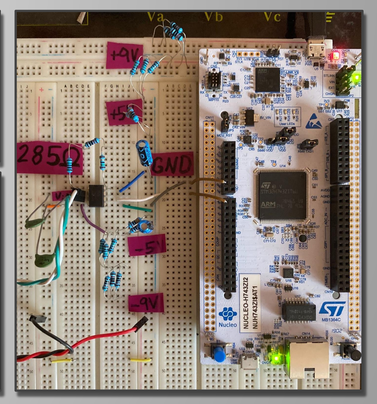

Graphical User Interface (GUI)

- Bar Chart
  - Ratio of sensor values to expected/allowable
- Line Chart
  - Each sensors output vs. time → displays 30s
- Data received via ethernet

Prototype of sensor array

- Components
  - Analog pressure transducer
  - Instrumentation amplifier
  - ADC onboard microcontroller

Raytheon
Peter Carter
UMBRA LAB
UC SANTA BARBARA engineering

Acknowledgements:

Paul Hoff, Dr. Greg Dahlen, Prof. Reza Abdolee, Prof. Tyler Susko, Prof. Ilan Ben-Yaacov, Dr. Trevor Marks, Kirk Fields, CompositeX, Dan Moser