Powder Spreading Machine

Gear Leaders Inc.

George Baier | Mark Folk-Liscum | Benjamin Frias | Jesus Quintero | Aaron Santos

Background

Powder bed fusion (PBF) is an additive manufacturing process used to 3D print metal parts. Thin layers of metal powder are spread across a flat build plate, where a laser melts them together into a desired shape. This process is repeated until a part is produced. The Lawrence Livermore National Laboratory carries two different machines that employ PBF: SLM and Concept Laser (CL).

The 2nd Generation Powder Spreading Machine (PSM) accurately replicates adaptations of the powder spreading processes of these two machines.

Overview

The 2nd Generation PSM:

- Replicates PBF in SLM and Concept Laser
- Has a controllable autonomous system with an easy-to-use interface controlling various powder spreading parameters
- Is easy to operate with minimal set-up and clean-up

Powder Spreading Processes

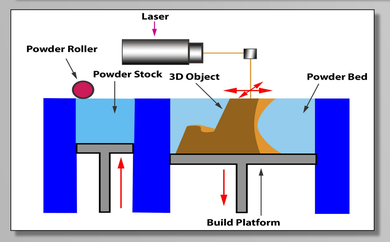

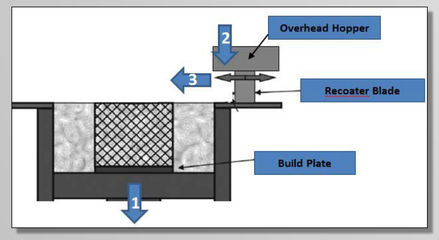

Concept Laser

1) Hopper chamber raises to expose powder stock
2) Build platform lowers
3) Blade sweeps across hopper chamber and build platform to create a fresh powder layer

SLM

1) Build plate lowers
2) Powder is deposited from above
3) Blade sweeps across the build plate
4) Process is repeated but in reverse direction

Design Overview

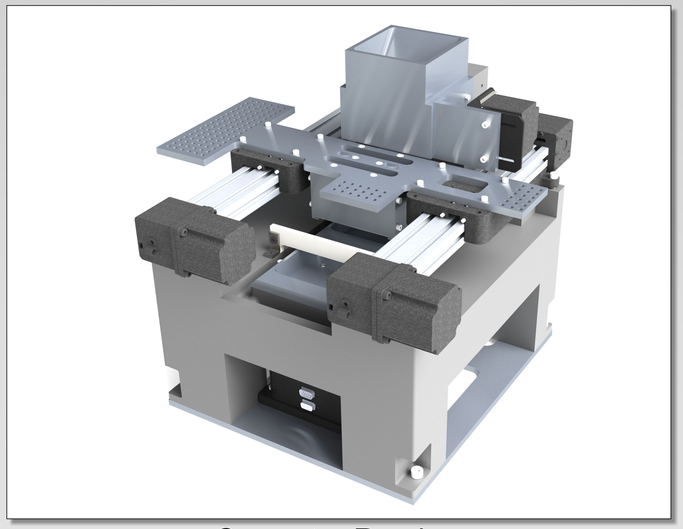

Computer Render

Key Components

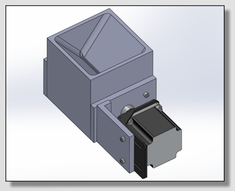

Overhead Hopper

- Dispenses powder into SLM Blade System
- 6 flutes, each with enough volume for a 10 µm layer of powder

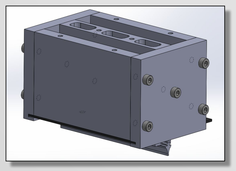

SLM Blade System

- Deposits powder on either side of blade, depending on spread direction
- Swappable SLM and Concept Laser blades

Belt Drive

- Sweeps blade across build plate
- Speeds up to 1.5m/s

Elevator

- Raises and lowers build plates and powder chamber
- 25mm of travel, 10 µm accuracy

Project Specifications

System	Requirement	Specification

General	Machine must have an automated motion control system.	• The machine shall have 2 parameter sets which mimic the motions of the CL and SLM Machines
		• These parameter sets shall be configurable
		  • Blade speed, dose rate, layer height
		  • Should be able to define number of layers
		  • Manual positioning of stages and blade

	Easy to use and clean	*For a given test:* • Set up shall take no longer than 10 minutes • Disassembly shall take no longer than 10 minutes • Powder clean up shall take no longer than 5 minutes
Spreading Performance	Spreading action shall mimic those of the Concept Laser and SLM Machines	• Machine shall spread powder in a unilateral method (Concept Laser) • Machine shall spread powder in a bilateral method (SLM)
	Blade mounted rigidly to the belt drive system	• Powder shall not be flicked or missed due to blade vibrations during spreading • Blade shall remain perpendicular to build plate within .25 mm
Motion Performance	Linear Belt Drive System	• Spreading blade shall achieve speeds up to 300 mm/s • Spreading blade speed shall have capabilities to change speeds during travel with a defined ramp rate
	Vertical Stages	• Accuracy: 10 µm • Uni-directional Repeatability: 10 µm • Minimum Step Size: 5 µm

Testing

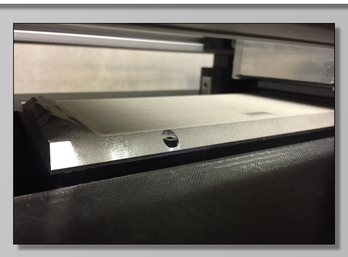

Results:

- Inspection of lines of powder dispensed from the Overhead Hopper showed a uniform distribution of powder along the full length of a flute
- Quantitative comparison of the theoretical and actual volume of powder dispensed from the Overhead Hopper showed an average powder loss of 0.909g/flute
- Qualitative observation of powder layers after spreading revealed flat layers, free from distortions for both processes

Lawrence Livermore National Laboratory

Acknowledgements:

Stephen Laguette, Tyler Susko, Roger Green, Andy Weinberg, Trevor Marks
Thomas Pluskell, Matthew Roberts, Aaron Ruch, Otis Walton

UC SANTA BARBARA engineering